Module – 1

8051 Microcontroller

Microprocessor vs Microcontroller

- General-purpose microprocessors
  - Must add RAM, ROM, I/O ports, and timers externally to make them functional
  - Make the system bulkier and much more expensive
  - Have the advantage of versatility on the amount of RAM, ROM, and I/O ports
- Microcontroller
  - The fixed amount of on-chip ROM, RAM, and number of I/O ports makes them ideal for many applications in which cost and space are critical
  - In many applications, the space it takes, the power it consumes, and the price per unit are much more critical considerations than the computing power

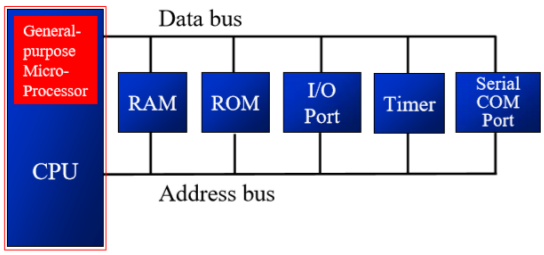

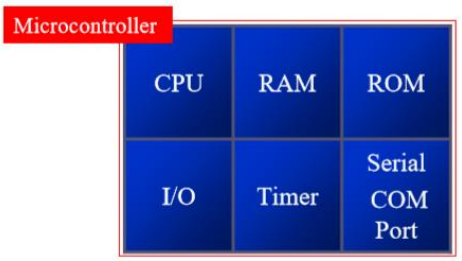

Microprocessor	Microcontroller
Microprocessor contains ALU, General purpose registers, stack pointer, program counter, clock timing circuit, interrupt circuit	Microcontroller contains the circuitry of microprocessor, and in addition it has built in ROM, RAM, I/O Devices, Timers/Counters etc.
It has many instructions to move data between memory and CPU	It has few instructions to move data between memory and CPU
Few bit handling instruction	It has many bit handling instructions
Less number of pins are multifunctional	More number of pins are multifunctional
Single memory map for data and code (program)	Separate memory map for data and code (program)
Access time for memory and IO are more	Less access time for built in memory and IO.
Microprocessor based system requires additional hardware	It requires less additional hardware
More flexible in the design point of view	Less flexible since the additional circuits which is residing inside the microcontroller is fixed for a particular microcontroller
Large number of instructions with flexible addressing modes	Limited number of instructions with few addressing modes

Microcontrollers for Embedded Systems

- An embedded product uses a microprocessor (or microcontroller) to do one task and one task only
  - There is only one application software that is typically burned into ROM
- A PC, in contrast with the embedded system, can be used for any number of applications
  - It has RAM memory and an operating system that loads a variety of applications into RAM and lets the CPU run them
  - A PC contains or is connected to various embedded products
    - Each one peripheral has a microcontroller inside it that performs only one task

Criteria for Choosing a Microcontroller

- Meeting the computing needs of the task at hand efficiently and cost effectively
  - Speed
  - Packaging
  - Power consumption
  - The amount of RAM and ROM on chip
  - The number of I/O pins and the timer on chip
  - How easy to upgrade to higher performance or lower power-consumption versions
  - Cost per unit
- Availability of software development tools, such as compilers, assemblers, and debuggers
- Wide availability and reliable sources of the microcontroller
- The 8051 family has the largest number of diversified (multiple source) suppliers
  - Intel (original)
  - Atmel
  - Philips/Signetics
  - AMD
  - Infineon (formerly Siemens)
  - Matra
  - Dallas Semiconductor/Maxim

Harvard and Von Neumann Architectures

- **Harvard Architecture**—a type of computer architecture where the instructions (program code) and data are stored in separate memory spaces

  Example: Intel 8051 architecture

- **Von Neumann Architecture**—another type of computer architecture where the instructions and data are stored in the same memory space

  Example: Intel x86 architecture (Intel Pentium, AMD Athlon, etc.)

8051 Architecture

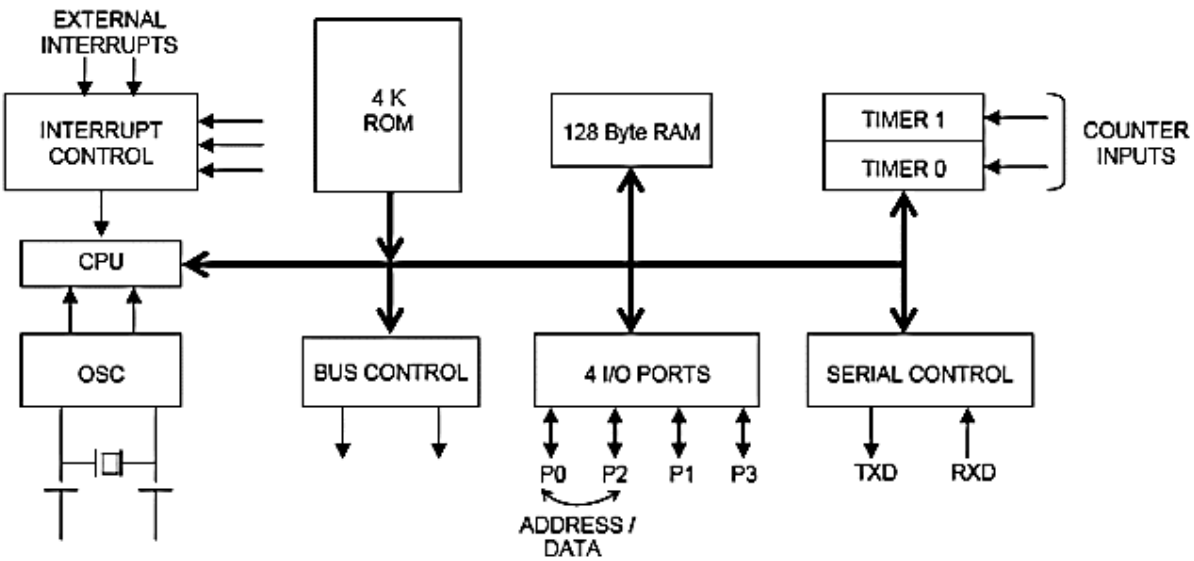

General Block Diagram of 8051 Microcontroller

Salient features of 8051 microcontroller are given below.

- Eight bit CPU
- On chip clock oscillator
- 4Kbytes of internal program memory (code memory) [ROM]
- 128 bytes of internal data memory [RAM]
- 64 Kbytes of external program memory address space.
- 64 Kbytes of external data memory address space.
- 32 bi directional I/O lines (can be used as four 8 bit ports or 32 individually addressable I/O lines)
- Two 16 Bit Timer/Counter :T0, T1
- Full Duplex serial data receiver/transmitter
- Four Register banks with 8 registers in each bank.
- Sixteen bit Program counter (PC) and a data pointer (DPTR)
- 8 Bit Program Status Word (PSW)
- 8 Bit Stack Pointer
- Five vector interrupt structure (RESET not considered as an interrupt.)
- 8051 CPU consists of 8 bit ALU with associated registers like accumulator 'A', B register, PSW, SP, 16 bit program counter, stack pointer.
- ALU can perform arithmetic and logic functions on 8 bit variables.
- 8051 has 128 bytes of internal RAM which is divided into
    - Working registers [00 – 1F]
    - Bit addressable memory area [20 – 2F]
    - General purpose memory area (Scratch pad memory) [30-7F]

8051 Microcontroller Architecture

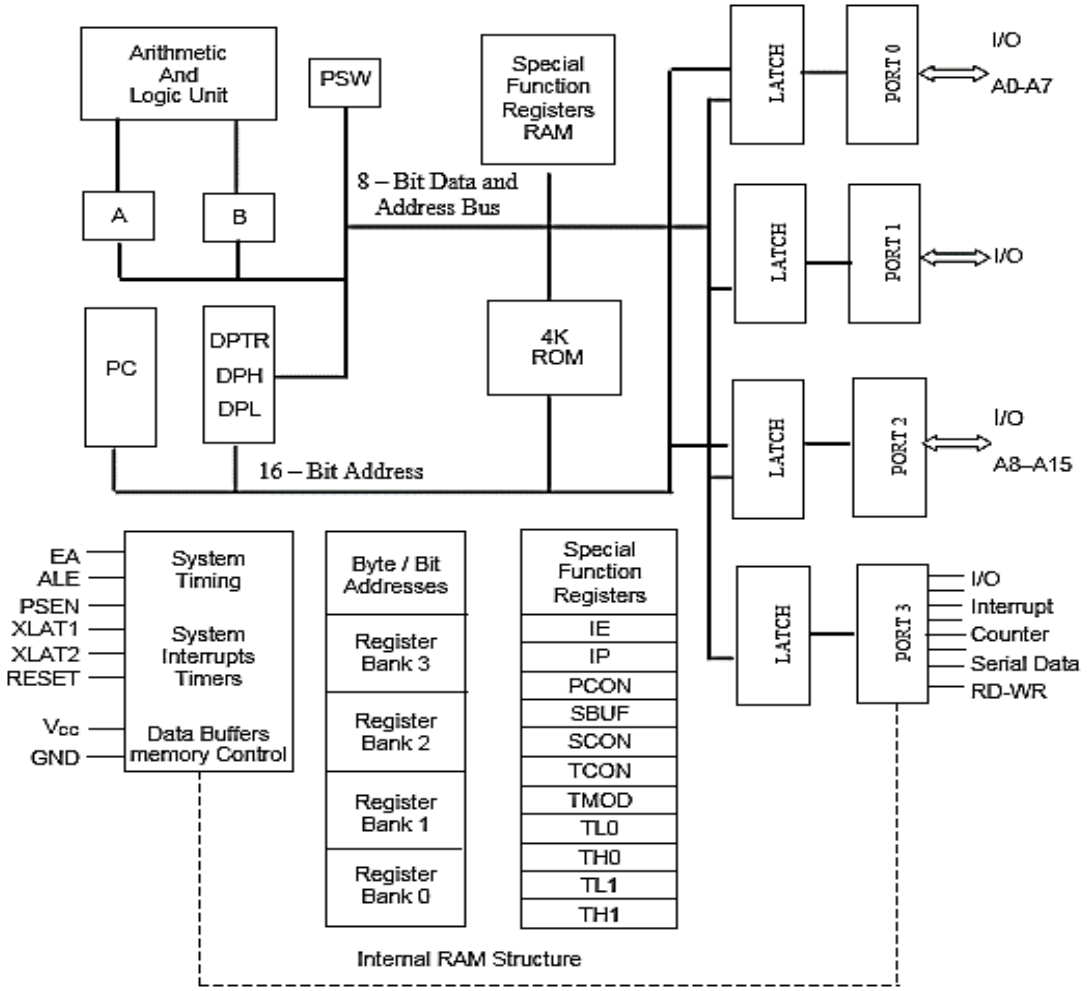

- 8051 has 4 K Bytes of internal ROM. The address space is from 0000 to 0FFFh. If the program size is more than 4 K Bytes 8051 will fetch the code automatically from external memory.
- Accumulator is an 8 bit register widely used for all arithmetic and logical operations. Accumulator is also used to transfer data between external memory. B register is used along with Accumulator for multiplication and division. A and B registers together is also called MATH registers.
- PSW (Program Status Word). This is an 8 bit register which contains the arithmetic status of ALU and the bank select bits of register banks.
- **The heart of the 8051 is the circuitry that generates the clock pulses** by which all internal operations are synchronized.
    - Pins **XTALI and XTAL2** are provided for connecting a resonant network to form an oscillator.
    - The 8051 requires an **external oscillator circuit**. The oscillator circuit **usually runs around 12MHz.** the crystal generates **12M pulses in one second**. The pulse is used **to synchronize the system operation** in a controlled pace.
    - A machine cycle is **minimum amount time** a **simplest machine instruction** must take.
    - An **8051 machine cycle consists of 12 crystal pulses** (ticks).
    - Instruction with a memory operand needs multiple memory accesses (machine cycles).

- Typically, a quartz crystal and capacitors are employed, as shown in Figure.

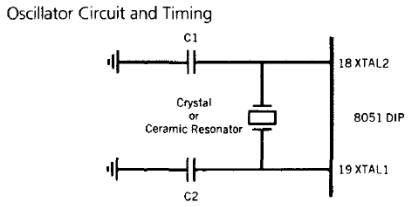

Crystal or Ceramic Resonator Oscillator Circuit

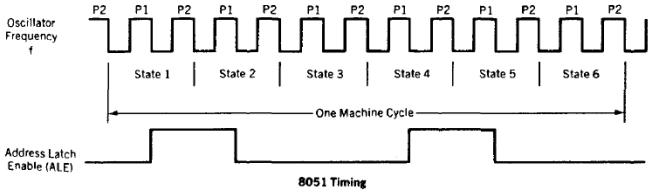

8051 Timing

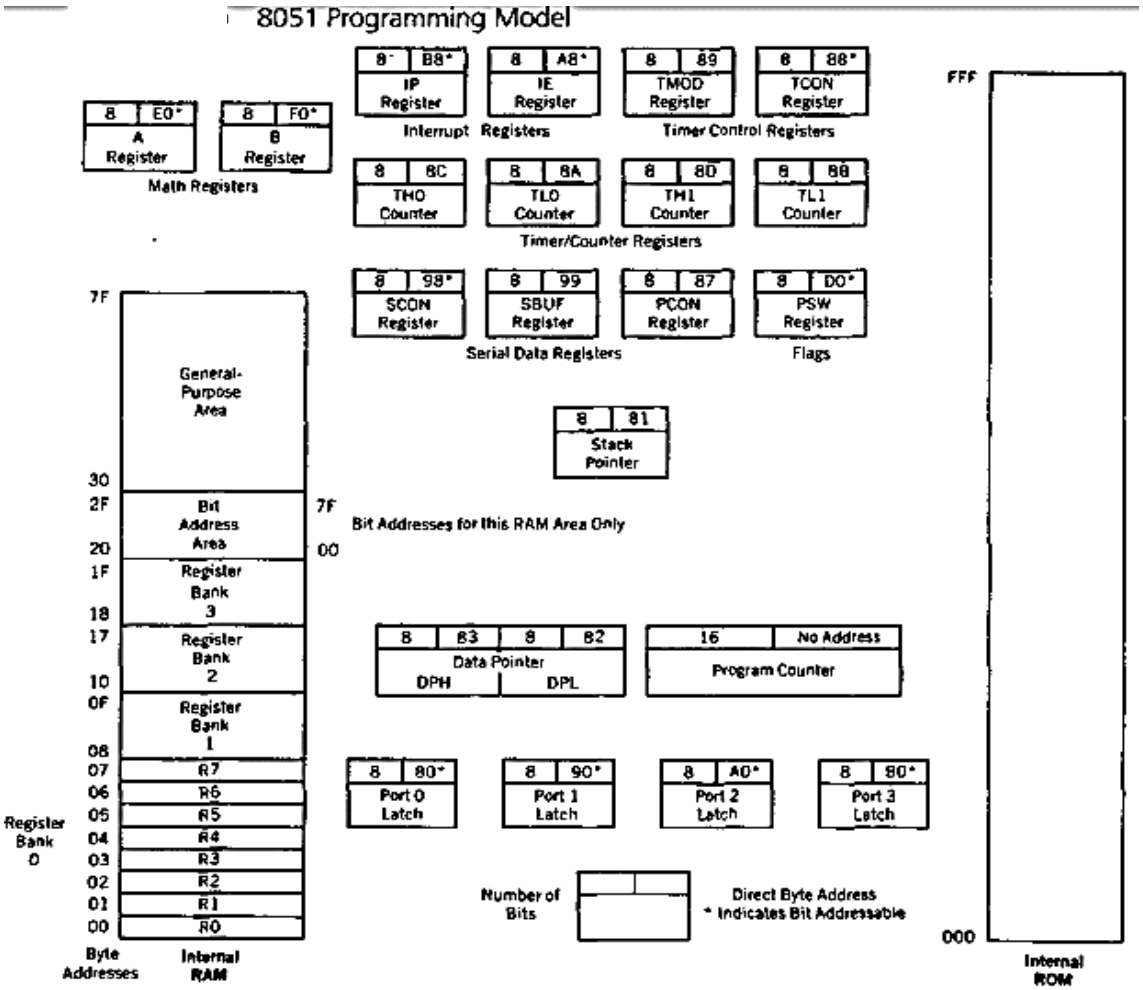

A and B CPU Registers

- The 8051 contains **34 general-purpose**, or working, registers. Two of these, registers A and B.
- The other **32 are arranged as** part of internal RAM in **four banks, BO-B3**, of **eight registers each, named RO to R7**.

- The A (accumulator) register is **used for many operations**, including addition, subtraction, integer multiplication and division, and Boolean bit manipulations.
- The A register is also used for **all data transfers between the 8051 and any external memory**.
- The **B register is used with the A register for multiplication and division operations.**

Program Counter (PC) and Data Pointer (DPTR)

- Program instruction bytes are fetched from locations in memory that are addressed by the PC.
- The PC is **automatically incremented after every instruction byte is fetched** and may also be altered by certain instructions.
- The PC is the only register that **does not have an internal address**.
- The DPTR register is made up of two 8-bit registers, named DPH and DPL
- Are used to furnish memory addresses **for internal and external code access and external data access**.
- The DPTR is under the control of program instructions
- Can be specified by its 16-bit name, DPTR, or by each individual byte name, DPH and DPL.
- DPTR does not have a single internal address; DPH and DPL are each assigned an address.

Flags and the Program Status Word (PSW)

- Flags are 1-bit registers provided to store the results of certain program instructions.
- Other instructions can test the condition of the flags and make decisions based upon the flag states.
- The 8051 has **four math flags** that **respond automatically to the outcomes of math operations** and three general-purpose user flags that can be set to 1 or cleared to 0 by the programmer as desired.
- The math flags include **carry (C), auxiliary carry (AC), overflow (OY), and parity (P)**.
- User flags are named **FO, GFO,** and **GFI**; they are general-purpose flags.
- Note that all of the flags can be set and cleared by the programmer.

7	6	5	4	3	2	1	0
CY	**AC**	**F0**	**RS1**	**RS0**	**OV**	**-**	**P**

THE PROGRAM STATUS WORD (PSW) SPECIAL FUNCTION REGISTER		
Bit	Symbol	Function
7	**CY**	Carry flag; used in arithmetic, JUMP, ROTATE, and BOOLEAN instructions
6	**AC**	Auxiliary carry flag; used for BCD arithmetic
5	**F0**	User flag 0
2	**OV**	Overflow flag; used in arithmetic instructions
1	**-**	Reserved for future use
0	**P**	Parity flag; shows parity of register A: 1 = Odd Parity

4	**RS1**	Register bank select bit 1
3	**RS0**	Register bank select bit 0
RS1	**RS0**	Function
0	**0**	Select register bank 0
0	**1**	Select register bank 1
1	**0**	Select register bank 2
1	**1**	Select register bank 3

The Stack and the Stack Pointer

- The stack refers to an area of internal RAM that is used in conjunction with certain opcodes **to store and retrieve data quickly**.
- The **8-bit stack pointer (SP) register** is used by the 8051 **to hold an internal RAM address** that is called the **"top of the stack."**
- The ***top of the stack*** is the location in internal RAM where the **last byte of data was stored by a stack operation**.
- The **SP increments *before* storing data** on the stack so that the stack grows *up* as data is stored.
- As data is retrieved from the stack, the byte is read from the stack, and then the **SP decrements to point to the next available byte of stored data**.
- The **SP is set to 07h when the 8051 is reset** and **can be changed** to any internal RAM address by the programmer.

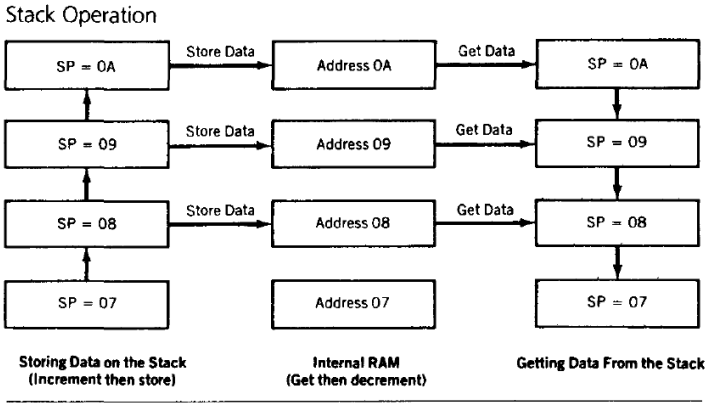

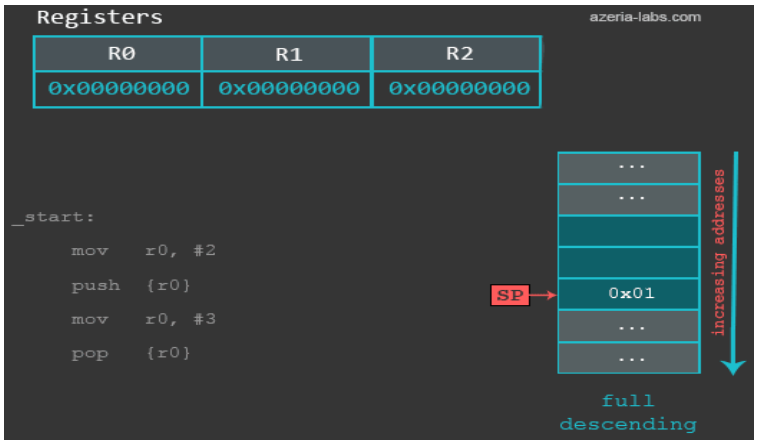

Special Function Registers

- The 8051 has a group of specific internal registers, each called a **special-function register (SFR)**, which may be addressed much like internal RAM, using addresses from **80h to FFh**.
- **Some SFRs** (marked with an asterisk*) are also **bit addressable**; this feature **allows the programmer to change only what needs to be altered**, leaving the remaining bits in that SFR unchanged.

- **Not all of the addresses from 80h to FFh are used for SFRs**, and attempting to use an address that is not defined, or "empty" results in unpredictable results.
- SFRs are named in certain opcodes by their functional names, such as A or TH0, and are referenced by other opcodes by their addresses, such as 0E0h or 8Ch.
- Note that *any* address used in the program *must* start with a number; thus address E0h for the A SFR begins with 0.
- Failure to use this number convention will result in an assembler error when the program is assembled.

NAME	FUNCTION	INTERNAL RAM ADDRESS (HEX)
A	Accumulator	0E0
B	Arithmetic	0F0
DPH	Addressing external memory	83
DPL	Addressing external memory	82
IE	Interrupt enable control	0A8
IP	Interrupt priority	0B8
P0	Input/output port latch	80
P1	Input/output port latch	90
P2	Input/output port latch	A0
P3	Input/output port latch	0B0

NAME	FUNCTION	INTERNAL RAM ADDRESS (HEX)
PCON	Power control	87
PSW	Program status word	0D0
SCON	Serial port control	98
SBUF	Serial port data buffer	99
SP	Stack pointer	81
TMOD	Timer/counter mode control	89
TCON	Timer/counter control	88
TL0	Timer 0 low byte	8A
TH0	Timer 0 high byte	8C
TL1	Timer 1 low byte	8B
TH1	Timer 1 high byte	8D

Pin Diagram

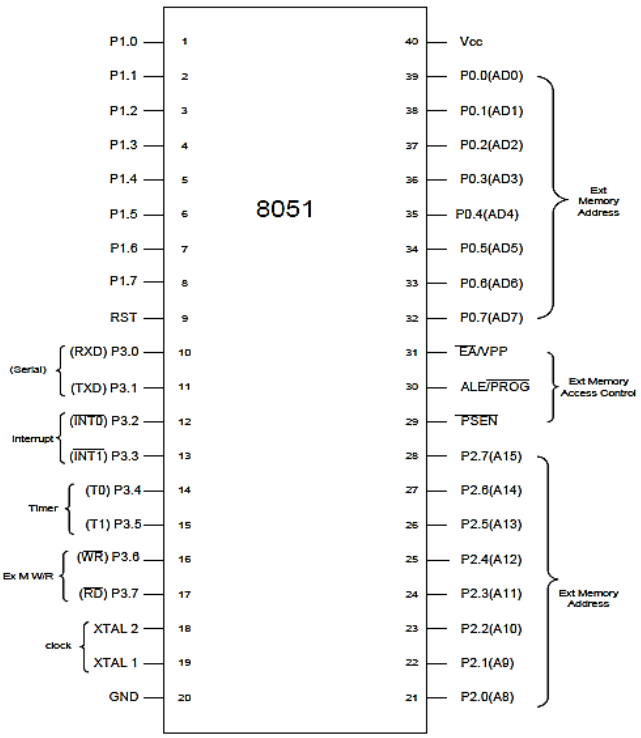

Pinout Description

Pins 1-8	**PORT 1**. Each of these pins can be configured as an input or an output.
Pin 9	**RESET**. A logic one on this pin disables the microcontroller and clears the contents of most registers. In other words, the positive voltage on this pin resets the microcontroller. By applying logic zero to this pin, the program starts execution from the beginning.
Pins10-17	**PORT 3**. Similar to port 1, each of these pins can serve as general input or output. Besides, all of them have alternative functions
Pin 10	**RXD. Serial asynchronous communication input or Serial synchronous communication output.**
Pin 11	**TXD. Serial asynchronous communication output or Serial synchronous communication clock output.**
Pin 12	**INT0.External Interrupt 0 input**
Pin 13	**INT1. External Interrupt 1 input**
Pin 14	**T0. Counter 0 clock input**
Pin 15	**T1. Counter 1 clock input**
Pin 16	**WR. Write to external (additional) RAM**
Pin 17	**RD. Read from external RAM**
Pin 18, 19	**XTAL2, XTAL1. Internal oscillator input and output. A quartz crystal which specifies operating frequency is usually connected to these pins.**
Pin 20	**GND. Ground.**
Pin 21-28	**Port 2. If there is no intention to use external memory then these port pins are configured as general inputs/outputs. In case external memory is used, the higher address byte, i.e. addresses A8-A15 will appear on this port. Even though memory with capacity of 64Kb is not used, which means that not all eight port bits are used for its addressing, the rest of them are not available as inputs/outputs.**
Pin 29	**PSEN. If external ROM is used for storing program then a logic zero (0) appears on it every time the microcontroller reads a byte from memory.**
Pin 30	**ALE. Prior to reading from external memory, the microcontroller puts the lower address byte (A0-A7) on P0 and activates the ALE output. After receiving signal from the ALE pin, the external latch latches the state of P0 and uses it as a memory chip address. Immediately after that, the ALE pin is returned its previous logic state and P0 is now used as a Data Bus.**
Pin 31	**EA. By applying logic zero to this pin, P2 and P3 are used for data and address transmission with no regard to whether there is internal memory or not. It means that even there is a program written to the microcontroller, it will not be executed. Instead, the program written to external ROM will be executed. By applying logic one to the EA pin, the microcontroller will use both memories, first internal then external (if exists).**
Pin 32-39	**PORT 0. Similar to P2, if external memory is not used, these pins can be used as general inputs/outputs. Otherwise, P0 is configured as address output (A0-A7) when the ALE pin is driven high (1) or as data output (Data Bus) when the ALE pin is driven low (0).**
Pin 40	**VCC. +5V power supply.**

Internal Memory organization

- A functioning computer **must have**
  - **MEMORY FOR PROGRAM CODE BYTES, COMMONLY IN ROM**
  - **RAM MEMORY FOR VARIABLE DATA THAT CAN BE ALTERED AS THE PROGRAM RUNS.**
- Additional memory can be added externally using suitable circuits.
- 8051 has a **Harvard architecture**, which uses the ***same address***, in ***different*** **memories**, for code and data.
  - Internal circuitry accesses the correct memory based upon the nature of the operation in progress.

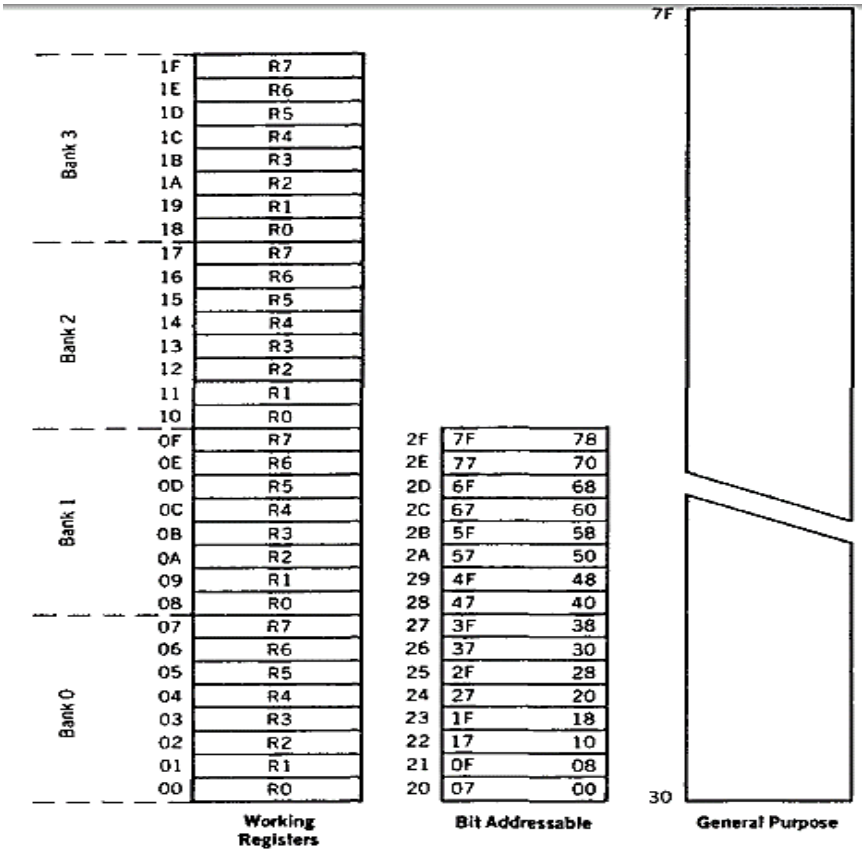

Internal RAM

- Thirty-two bytes from address **00h to 1Fh that make up 32 working registers** organized as four banks of eight registers each. (Bank0- Bank3; with each bank having registers R0-R7)
- Each register can be **addressed by name** (when its bank is selected) **or by its RAM address**.
- Thus R0 of bank 3 is R0 (if bank 3 is currently selected) or address 18h (whether bank 3 is selected or not).
- Bits **RS0 and RS1 in the PSW determine** which bank of registers is currently in use.
- **Register banks not selected can be used as general-purpose RAM**.

- **Bank 0 is selected upon reset**.
- A ***bit-addressable*** area of 16 bytes occupies RAM ***byte*** **addresses 20h to 2Fh**, forming a **total of 128 addressable bits**.
- An addressable bit may be specified by its ***bit*** **address of 00h to 7Fh**, or 8 bits may form any ***byte*** **address from 20h to 2Fh**.
  - Thus, for example, bit address 4Fh is also bit 7 of byte address 29h.
  - Addressable bits are useful when the program need only remember a binary event (switch on, light off, etc.).
- A **general-purpose** RAM area above the bit area, **from 30h to 7Fh**, addressable as bytes.

Internal ROM

- The 8051 is organized so that data memory and program code memory can be in **two entirely different physical memory entities; *each* has the same address ranges**.
- A corresponding block of internal program code, contained in an internal ROM, occupies code address space 0000h to 0FFFh.
- The PC is ordinarily used to address program code bytes from addresses 0000h to 0FFFh.
- Program addresses **higher than 0FFFh**, which exceed the internal ROM capacity, will cause the 8051 to **automatically fetch code bytes from external program memory**.
- **Code bytes can also be fetched exclusively from an external memory**, addresses 0000h to FFFFh, by connecting the external access pin (**EA** pin 31 on the DIP) to **ground**.
- **The PC does not care where the code is**; the circuit designer decides whether the code is found totally in internal ROM, totally in external ROM, or in a combination of internal and external ROM.

Input/ Output Pins, Ports, and Circuits

- Ports can be accessed directly by instructions during program execution
- I/O ports are memory mapped, they are treated as memory locations
- All ports are bit addressable
- Each PIN consists of a D latch, I/P buffer and O/P driver
- SFRs for each port is made of 8-latches
- Accessed by SFRs address or name of that port
- The four 8-bit I/O ports P0, P1, P2 and P3 each uses 8 pins
- All the ports upon RESET are configured as output, ready to be used as output ports
  - When the first 0 is written to a port, it becomes an output
  - To reconfigure it as an input, a 1 must be sent to the port
    - To use any of these ports as an input port, it must be programmed

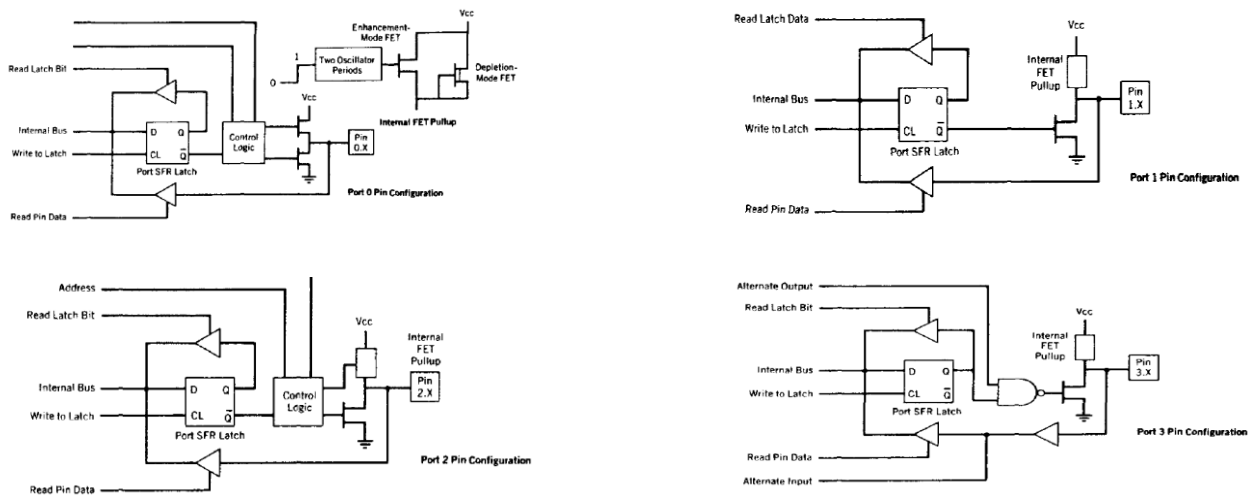

External Memory (ROM & RAM) interfacing

Eg. Interfacing of 16 K Byte of RAM and 32 K Byte of EPROM to 8051

Number of address lines required for 16 Kbyte memory is 14 lines and that of 32Kbytes of memory is 15 lines.

The connections of external memory is shown below.

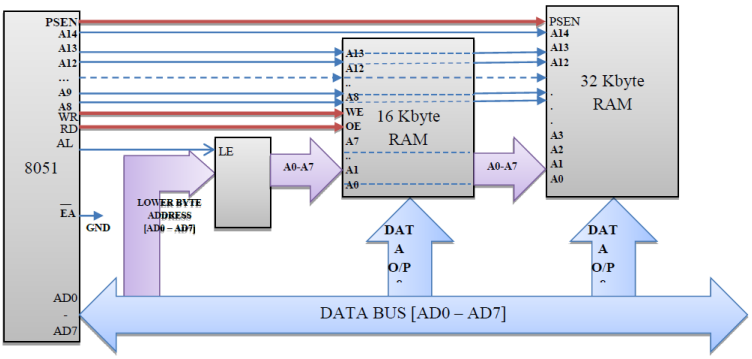

The lower order address and data bus are multiplexed. De-multiplexing is done by the latch. Initially the address will appear in the bus and this latched at the output of latch using ALE signal. The output of the latch is directly connected to the lower byte address lines of the memory. Later data will be available in this bus. Still the latch output is address itself. The higher byte of address bus is directly connected to the memory. The number of lines connected depends on the memory size.

The RD and WR (both active low) signals are connected to RAM for reading and writing the data.

PSEN of microcontroller is connected to the output enable of the ROM to read the data from the memory.

EA (active low) pin is always grounded if we use only external memory. Otherwise, once the program size exceeds internal memory the microcontroller will automatically switch to external memory.

- The number of bits that a semiconductor memory chip can store is called **chip capacity**
  - It can be in units of Kbits (kilobits), Mbits (megabits), and so on.
- Memory chips are organized into a number of locations within the IC.
  - Each location can hold 1 bit, 4 bits, 8 bits, or even 16 bits, depending on how it is designed internally
    - The number of locations within a memory IC depends on the address pins
    - The number of bits that each location can hold is always equal to the number of data pins
- A memory chip contain 2^x location, where x is the number of address pins.
- Each location contains y bits, where y is the number of data pins on the chip.
- The entire chip will contain 2^x X y bits

Example 1.1
A given memory chip has 12 address pins and 4 data pins. Find:
(a) The organization, and (b) the capacity.
Solution:

a) This memory chip has **4096 locations (212 = 4096)**, and each location **can hold 4 bits** of data. This gives an organization of **4096 × 4**, often represented as **4K × 4.**
b) The **capacity is equal to 16K** bits since there is a total of 4K locations and each location can hold 4 bits of data.

Example 1.2
A 512K memory chip has 8 pins for data. Find:
(a) The organization, and (b) the number of address pins for this memory chip.
Solution:

a) A memory chip with 8 data pins means that each location within the chip can hold 8 bits of data. To find the number of locations within this memory chip, divide the capacity by the number of data pins. 512K/8 = 64K; therefore, the organization for this memory chip is 64K × 8
b) The chip has 16 address lines since 2^{16} = 64K

Memory Address Decoding

- The CPU provides the address of the data desired, but it is the job of the decoding circuitry to locate the selected memory block
  - Memory chips have one or more pins called CS (chip select), which must be activated for the memory's contents to be accessed.
  - Sometimes the chip select is also referred to as chip enable (CE)
- In connecting a memory chip to the CPU, the following points need to be noted
  - The data bus of the CPU is connected directly to the data pins of the memory chip
  - Control signals RD (read) and WR (memory write) from the CPU are connected to the OE (output enable) and WE (write enable) pins of the memory chip

- In the case of the address buses, while the lower bits of the address from the CPU go directly to the memory chip address pins, the upper ones are used to activate the CS pin of the memory chip.

- Normally memories are divided into blocks and the output of the decoder selects a given memory block
  - Using simple logic gates
  - Using the 74LS138
  - Using programmable logics

Simple Logic Gate Address Decoder

- The simplest way of decoding circuitry is the use of NAND or other gates.
  - The fact that the output of a NAND gate is active low, and that the CS pin is also active low makes them a perfect match

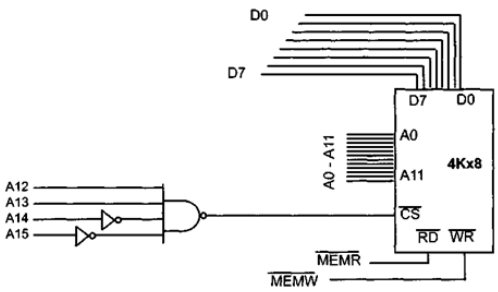

Logic Gate as Decoder

Using 74LS138 3-8 Decoder

- This is one of the most widely used address decoders
  - The 3 inputs A, B, and C generate 8 active-low outputs Y0 – Y7
  - Each Y output is connected to CS of a memory chip, allowing control of 8 memory blocks by a single 74LS138
  - In the 74LS138, where A, B, and C select which output is activated, there are three additional inputs, G2A, G2B, and G1
  - G2A and G2B are both active low, and G1 is active high
  - If any one of the inputs G1, G2A, or G2B is not connected to an address signal, they must be activated permanently either by Vcc or ground, depending on the activation level

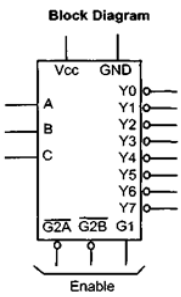

Function Table

Inputs				Outputs							
Enable		Select									
G1	G2	C	B	A	Y0	Y1	Y2	Y3	Y4	Y5	Y6	Y7
X	H	X	X	X	H	H	H	H	H	H	H	H
L	X	X	X	X	H	H	H	H	H	H	H	H
H	L	L	L	L	L	H	H	H	H	H	H	H
H	L	L	L	H	H	L	H	H	H	H	H	H
H	L	L	H	L	H	H	L	H	H	H	H	H
H	L	L	H	H	H	H	H	L	H	H	H	H
H	L	H	L	L	H	H	H	H	L	H	H	H
H	L	H	L	H	H	H	H	H	H	L	H	H
H	L	H	H	L	H	H	H	H	H	H	L	H
H	L	H	H	H	H	H	H	H	H	H	H	L

74LS138 Decoder

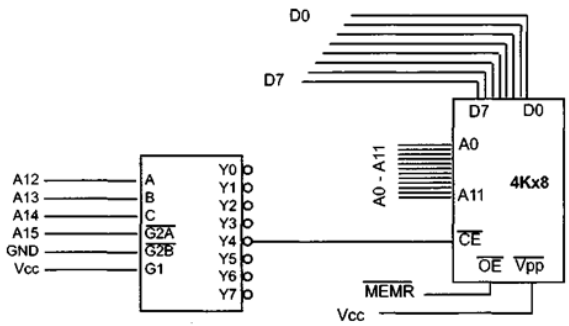

74LS138 as Decoder

Example 1.3 Looking at the design in the above figure, find the address range for the Following.
(a) Y4, (b) Y2, and (c) Y7.

Solution :
(a) The address range for Y4 is calculated as follows.

A15	A14	A13	A12	A11	A10	A9	A8	A7	A6	A5	A4	A3	A2	A1	A0
0	1	0	0	0	0	0	0	0	0	0	0	0	0	0	0
0	1	0	0	1	1	1	1	1	1	1	1	1	1	1	1

The above shows that the range for Y4 is 4000H to 4FFFH. In the above figure, notice that A15 must be 0 for the decoder to be activated. Y4 will be selected when A14 A13 A12 = 100 (4 in binary). The remaining A11-A0 will be 0 for the lowest address and 1 for the highest address.

(b) The address range for Y2 is 2000H to 2FFFH.

A15	A14	A13	A12	A11	A10	A9	A8	A7	A6	A5	A4	A3	A2	A1	A0
0	0	1	0	0	0	0	0	0	0	0	0	0	0	0	0
0	0	1	0	1	1	1	1	1	1	1	1	1	1	1	1

(c) The address range for Y7 is 7000H to 7FFFH.

A15	A14	A13	A12	A11	A10	A9	A8	A7	A6	A5	A4	A3	A2	A1	A0
0	1	1	1	0	0	0	0	0	0	0	0	0	0	0	0
0	1	1	1	1	1	1	1	1	1	1	1	1	1	1	1

External ROM (program memory) Interfacing

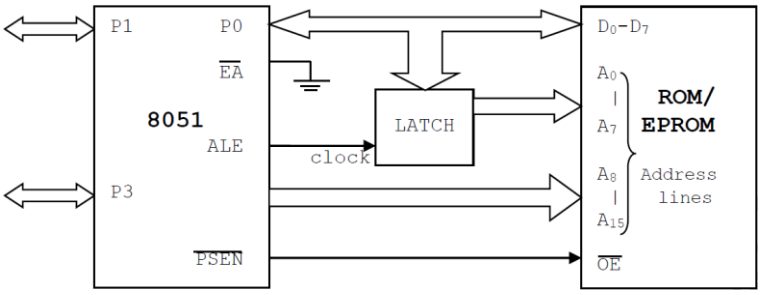

Interfacing of ROM/EPROM to 8051

Above figure shows how to access or interface ROM to 8051.
Port 0 is used as multiplexed data & address lines. It gives lower order (A7-A0) 8 bit address in initial cycle & higher order (A8-A15) used as data bus. 8 bit address is latched using external latch & ALE signal from 8051. Port 2 provides higher order (A15-A8) 8 bit address. PSEN' is used to activate the output enable signal of external ROM/EPROM.

External RAM (data memory) Interfacing

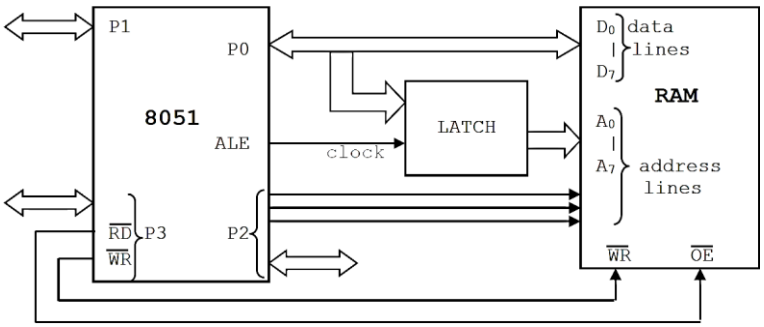

Interfacing of RAM (data memory) to 8051

Above figure shows how to connect or interface external RAM (data memory) to 8051.
Port 0 is used as multiplexed data & address lines. Address lines are decoded using external latch & ALE signal from 8051 to provide lower order (A7-A0) address lines. Port 2 gives higher order address lines. RD' & WR' signals from 8051 selects the memory read & memory write operations respectively.

Example 1.4: Design a controller system using 8051.Interface the external RAM of size 16k x 8.
Solution: Given, Memory size: 16k
That means we require 2^n=16k :: n address lines
Here n=14 :: A0 to A13 address lines are required.
A14 and A15 are connected through OR gate to CS pin of external RAM.
When A14 and A15 both are low (logic '0'), external data memory (RAM) is selected.
Address Decoding (Memory Map) for 16k x 8 RAM.

Address	A_{15}	A_{14}	A_{13}	A_{12}	A_{11}	A_{10}	A_9	A_8	A_7	A_6	A_5	A_4	A_3	A_2	A_1	A_0	HEX adrs.
starting	0	0	0	0	0	0	0	0	0	0	0	0	0	0	0	0	0000H
end	0	0	1	1	1	1	1	1	1	1	1	1	1	1	1	1	3FFFH

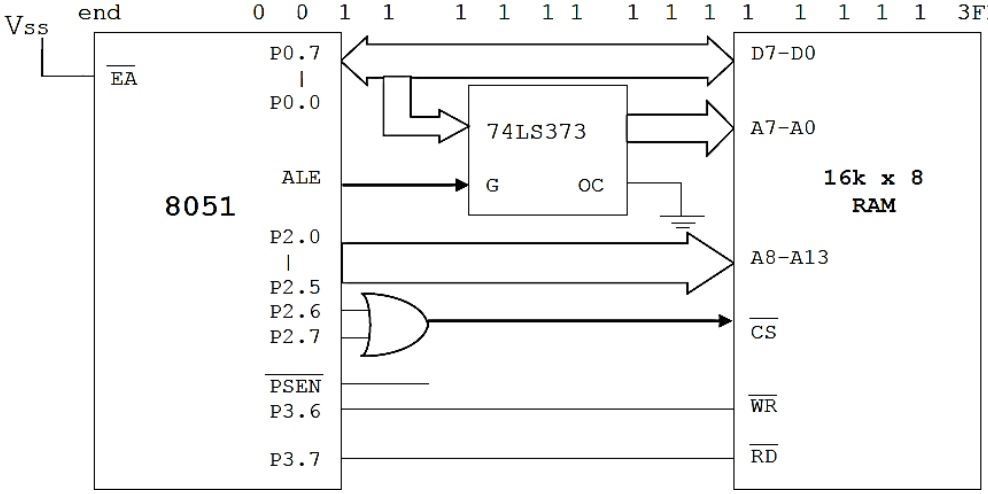

Example 1.5: Design a controller system using 8051.Interface the external ROM of size 4k x 8.
Solution: Given, Memory size: 4k
That means we require 2^n=4k :: n address lines
Here n=12 :: A_0 to A_{11} address lines are required.
Remaining lines A_{12}, A_{13}, A_{14}, A_{15} & PSEN are connected though OR gate to CS & RD of external ROM.
When A0 to A0 are low (logic '0'), only then external ROM is selected.
Address Decoding (Memory Map) for 4k x 8 RAM.

Address	A_{15}	A_{14}	A_{13}	A_{12}	A_{11}	A_{10}	A_9	A_8	A_7	A_6	A_5	A_4	A_3	A_2	A_1	A_0	HEX adrs.
starting	0	0	0	0	0	0	0	0	0	0	0	0	0	0	0	0	0000H
end	0	0	0	0	1	1	1	1	1	1	1	1	1	1	1	1	0FFFH

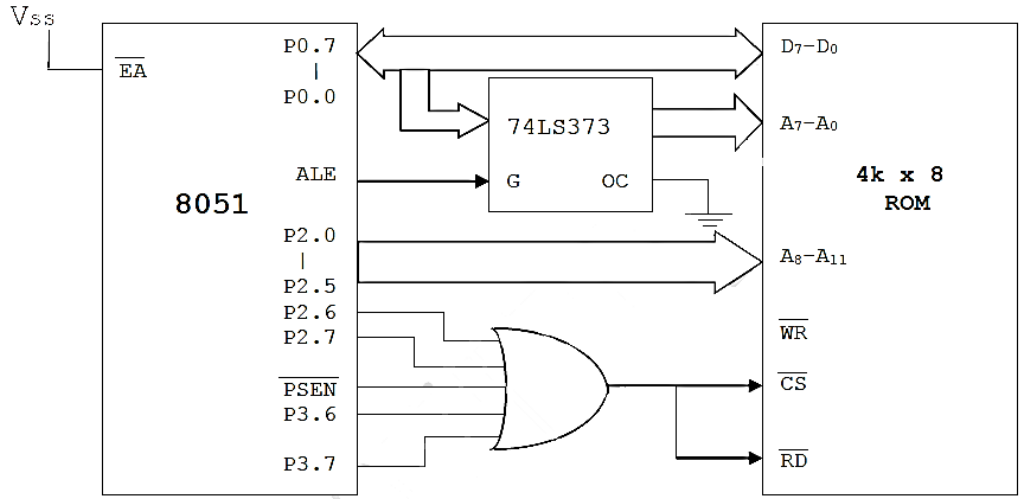

****

Nothing
worth having was ever achieved
without effort
- Theodore Roosevelt

ಉತ್ತಮವಾದದು ಶ್ರಮವಿಲ್ಲದೆ ಲಭಿಸದು,
ಇಚ್ಛೆಯಿಲ್ಲದಿದ್ದರಂತೂ ಅದು ಸಾಧ್ಯವೇ ಇಲ್ಲ.

ಕು.ವೆಂ.ಪು.